Notification Appliances
SL2 Weatherproof Series

Horns | Strobes | Horn-Strobes
Applications : Indoor / Outdoor, Ceiling and Wall

Architect & Engineer Specifications

- ☐ Weatherproof notification appliances that meet fire-industry codes and regulations for Indoor and Outdoor use
- ☐ Compatible with Siemens fire alarm control panels (FACPs), Siemens dual-sync control (DSC) modules and Siemens Power Supplies (PAD-3/-4/-5)
- ☐ Wall or Ceiling mount applications
- ☐ Field-selectable multiple Candela settings on a single device:
  - 15cd | 30cd | 75cd | 110cd |150cd | 185cd (Clear Lens Strobe)
  - 15cd | 30cd | 75cd | 95cd | 150cd | 177cd (Amber Lens Strobe)
- ☐ Three (3) field selectable Horn Settings:
  - Continuous, T3
  - T3 (Code 3)
  - T3/T4
- ☐ High or Low audible outputs
- ☐ Easy Installation with pre-wire capable Back Box or a Mounting Plate
- ☐ NEMA 3R and 4X Rated Devices
- ☐ UL1638 | UL1971 | UL464 Listed
- ☐ ULC525 | ULC526 Listed
- ☐ FM Approved
- ☐ FCC Part 15 Compliant
- ☐ RoHS Compliant

Product Overview

Siemens is now offering the SL2-series weatherproof appliances in the notification product portfolio. These NEMA 3R and 4X rated horn, strobe, and horn-strobe appliances are designed for both indoor and outdoor applications and are operational at a temperature range of -40° C to 66° C (-40° F to 150° F).

These weatherproof appliances are compatible with Siemens fire-alarm control panels (FACPs), Siemens dual-sync control (DSC) modules and with Siemens power supplies (PAD-3/-4/-5).

The strobe and horn-strobe devices are designed for operation at regulated 24V DC/FWR input voltage. The horns can work with either 12V or 24V DC/FWR regulated voltage.

The strobe portion of these appliances meets the 20-millisecond light-pulse-duration code requirements of NFPA 72 (2016 edition).

The strobe appliances feature six (6) candela settings in a single device with low current draws across the full candela range:

'CLEAR' Lens Strobes: 15cd I 30cd I 75cd I 110cd I 150cd I 185cd

'AMBER' Lens Strobes: 15cd I 30cd I 75cd I 95cd I 150cd I 177cd

The multi-candela strobe can operate as a synchronized strobe appliance when used in conjunction with an FACP following the Siemens sync protocol or when used with a sync module (DSC) or with Siemens power supplies (PAD-3/-4/-5).

Additionally, there are three (3) modes of operation for the audible portion of these notification appliances:

- Continuous, T3 (Non-Sync)
- T3 (Code 3) (Siemens Sync Protocol)
- T3/T4 (DSC)

The horns, strobes and horn-strobe appliances are apt for wall or ceiling mount applications and can be easily installed with a pre-wire capable back box (SL24XBB) or a mounting plate (SL23R). All NEMA 3R devices are flush mounted and have an IP54 rating (they come with the required mounting plate). The 4X devices must be surface mounted (utilizing a surface mount box which is included with each 4X device) and are IP66 rated.

All SL2-series weatherproof notification appliances are UL464, UL1638, UL1971, and ULC525, ULC526 approved.

Horn

Horn-Strobe with Amber Lens

Strobe with 'FIRE' Letter Plate

Wiring Diagrams

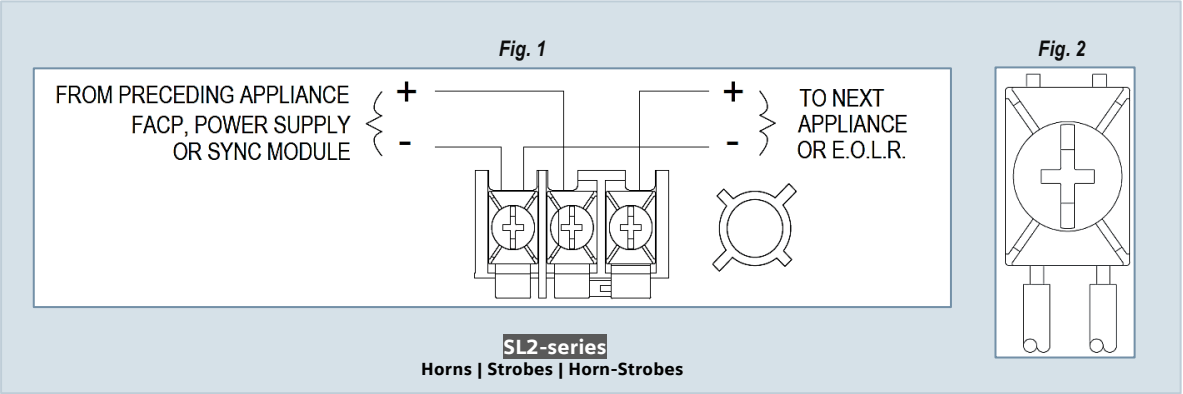

Specifications

The SL2 weatherproof notification appliances are designed to operate at a regulated 24V DC/FWR or 12V DC/FWR (horns only) input voltage:

- Voltage Range: 16V - 33V (24V) (applicable for all SL2-series horn/ strobe/horn-strobe models)
- Voltage Range: 8V - 17.5V (12V) (applicable for SL2-series horn models only)

All horn/ horn-strobe models have three (3) temporal pattern settings available for sync or non-sync operations:

- Non-Sync: *Continuous, T3* (field selectable)
- Siemens Sync Protocol: *T3 (Code 3)*
- *T3/T4* Sync Selectable (w/DSC)

The strobe appliances meet the 20-millisecond light-pulse-duration code requirements of NFPA 72 (2016 edition).

All SL2-series strobe appliances feature field-selectable multi candela settings:

- 'Clear' Lens strobe : 15cd I 30cd I 75cd I 110cd I 150cd I 185cd (Models SL24XST, SL23RST)
- 'AMBER' Lens strobe: 15cd I 30cd I 75cd I 95cd I 150cd I 177cd (Models SL24XST-A, SL23RST-A)

  ('AMBER' lens is certified as an Emergency Warning Visual Signal)

The strobes are also available with Blue, Green, or Red Lens options. These colored lens strobes are solely used for visual '**Private Mode**' alarm notification. The field selectable candela settings for these strobes are as follows:

- 15cd **I** 30cd **I** 75cd **I** 95cd **I** 135cd **I** 150cd (Models SL24XST-B, SL23RST-B)
- 15cd **I** 30cd **I** 60cd **I** 75cd **I** 115cd **I** 125cd (Models SL24XST-G, SL23RST-G)
- 10cd **I** 20cd **I** 40cd **I** 50cd **I** 75cd **I** 80cd (Models SL24XST-R, SL23RST-R)

(*Refer to Installation Instruction **P85827-004A** for additional information on blue, green and red strobe appliances.*)

The SL2-series horns and horn-strobe appliances may be installed in the same notification zone and field of view with any Siemens strobe products using the Siemens sync protocol. The maximum number of notification appliances per NAC is 105. (For more information, see Installation Instruction ***P85827-001A***)

All models are UL/ULC listed as compatible with Siemens Fire Alarm Control Panels (FACP) and accessories that have been determined to be compatible with Siemens strobe sync protocol including the ST, SE, SEH, SET, S-HQ, STH, AS, CH, HS, and MTH series models.

The SL2-series horns, strobes and horn-strobe appliances are UL / ULC listed for both indoor and outdoor operations. They operate at a temperature range of -40° C to 66° C (-40° F to 150° F) with a maximum relative humidity of 95%.

These appliances can be easily installed with a pre-wire capable back box (SL24XBB) or a mounting plate (SL23R). All inputs employ IN / 0UT wiring terminals using #12 to #18 AWG wiring.

The SL2-series horns and horn-strobe appliances have UL464 and ULC525 listings for horns and UL1638 /1971 and ULC 526 listings for strobes. These appliances are FM approved and RoHS compliant. The horns and horn-strobe appliances also comply with applicable clauses of FCC Part 15 .

Mounting Options

Type 3R/IP54 Flush Mount (SL23R) **

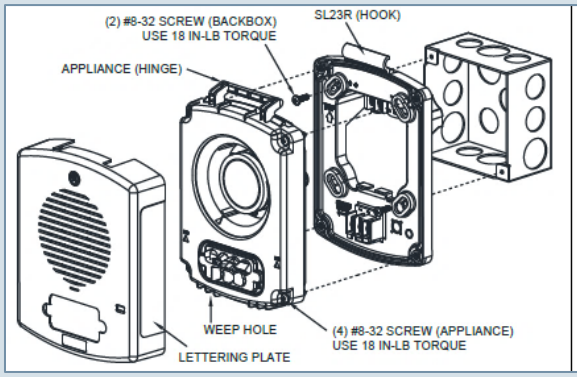

Type 4X/IP66 Surface Mount (SL24XBB) **

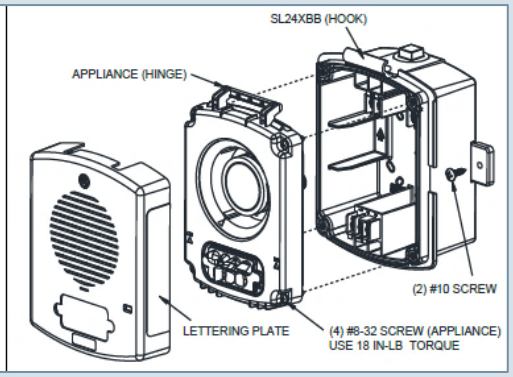

** The flush mount plate comes with each 3R device and the surface mount back-box is included with each 4X device. These mounting plates and back boxes cannot be ordered separately. Please refer to installation instruction - **P85820-001A** - for back-box & mounting plate details.

Technical Data

Horn-Strobes | Current Ratings 24V (Amps)

Input Voltage	Horn Setting	Candela Settings					
		15cd	30cd	75cd	95cd / 110cd	150cd	177cd / 185cd
DC	CONT, T3, T3/T4 (High)	0.063	0.083	0.105	0.127	0.193	0.230
	CONT, T3, T3/T4 (Low)	0.045	0.066	0.085	0.107	0.175	0.215
FWR	CONT, T3, T3/T4 (High)	0.095	0.119	0.162	0.197	0.291	0.339
	CONT, T3, T3/T4 (Low)	0.076	0.096	0.136	0.169	0.267	0.321

Strobe | Current Ratings (Amps)

	Input Voltage	Candela Settings					
		15cd	30cd	75cd	110cd	150cd	185cd
Models: SL24XST SL23RST	DC	0.026	0.038	0.070	0.097	0.179	0.206
	FWR	0.034	0.053	0.098	0.137	0.235	0.308
	Input Voltage	Candela Settings					
		15cd	30cd	75cd	95cd	150cd	177cd
Models: SL24XST-A SL23RST-A	DC	0.026	0.038	0.070	0.097	0.179	0.206
	FWR	0.034	0.053	0.098	0.137	0.235	0.308

GENERAL NOTES:

1. Strobes are designed to flash at 1-flash-per-second minimum over their "Regulated Voltage Range."
2. NFPA-72 specifies a flash rate of 1-to-2 flashes-per-second.
3. All candela ratings represent minimum effective strobe intensity based on UL 1971.

Horn | Current Ratings (Amps)

Horn Setting	Input Voltage	Regulated Voltage Range	
		12V (8.0 – 17.5V)	24V (16.0 – 33.0V)
CONT, T3, T3/T4 (High)	DC	0.054	0.052
CONT, T3, T3/T4 (Low)		0.034	0.038
CONT, T3, T3/T4 (High)	FWR	0.102	0.102
CONT, T3, T3/T4 (Low)		0.075	0.075

Horn Sound Pressure Level Ratings (SPL)

Reverberant dBA @ 10Ft per UL464 / ULC525		
Horn Setting	SPL at 12V (HN Models Only)	SPL at 24V (HN and HS Models)
CONT, T3, T3/T4 (High)	83	90
CONT, T3, T3/T4 (Low)	74	86

Horn and Candela Settings

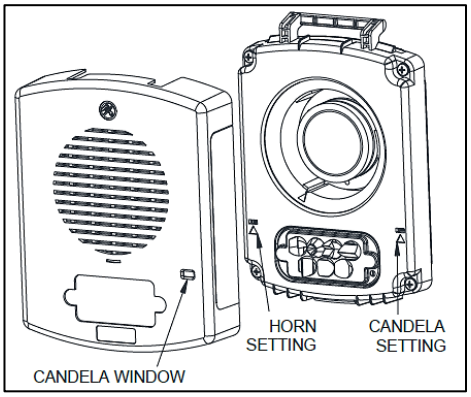

NOTE: The default horn setting is ***T3*** and candela setting is ***15cd.***

Technical Data

General Properties

	SL2 Weatherproof Horns I Strobes I Horn-strobes
OPERATING TEMPERATURE:	- -40° C to 66° C (-40° F to 150° F). - Indoor and Outdoor Use
RELATIVE HUMIDITY:	95%
OPERATING VOLTAGE RANGES:	- 12 VDC / VFWR - 8.0V - 17.5V (horn models only) - 24 VDC / VFWR - 16.0V – 33.0V (all models)
STROBE OUTPUT RATING:	Field-selectable candela outputs: ▪ Clear Lens strobe: 15cd I 30cd I 75cd I 110cd I 150cd I 185cd ▪ Amber Lens strobe: 15cd I 30cd I 75cd I 95cd I 150cd I 177cd
STROBE FLASH RATE:	Strobes are designed to flash at one-flash-per-second
STROBE SYNCRONIZATION:	Compatible with Siemens fire alarm control panels (FACPs), Siemens dual-sync control (DSC) module, Siemens Power Supplies (Pad-3/-4/-5)
***TEMPORAL PATTERN:**	▪ Continuous ▪ T3 (Code 3) ▪ T3/T4(Code 4)

***NOTE:** The Code 3 temporal pattern (1/2 second on, 1/2 second off, 1/2 second on, 1/2 second off, 1/2 second on, 1-1/2 off and repeat) is specified by ANSI and NFPA 72 for standard emergency evacuation signaling. (Available with sync or non-sync operation)

***NOTE:** The Code 4 temporal pattern (100 ms on, followed by 100 ms off, for 4 cycles, followed by 5 seconds of silence and repeat), is specified by ANSI and NFPA 72 for carbon monoxide emergency signaling. (Available with sync operation only)

Physical Properties

	SL2 Weatherproof Horns I Strobes I Horn-strobes
MATERIAL:	Red or white textured UV stabilized, colored engineered plastic.
LENS:	Light Emitting Diode (LED) in a rugged Lexan lens
WEIGHT:	**Horns:** 1.21 lbs.(3R devices) / 1.78 lbs.(4X devices) **Strobes:** 0.67 lbs. **Horn-Strobes**: 1.26 lbs.(3R devices) / 1.84 lbs.(4X devices)
DIMENSIONS (Inches):	▪ 3R devices - 7.68 x 5.75 x 1.75 ▪ 4X devices - 7.68 x 5.75 x 4.25

Mounting and Wiring Properties

	SL2 Weatherproof Horns I Strobes I Horn-strobes
MOUNTING:	- Wall & Ceiling-mount applications - SL24XBB Surface Box and SL23R Mounting Plate
WIRING TYPE:	#12 – #18, American Wire Gauge (AWG)

Details for Ordering

MODEL	PART NUMBER	NEMA RATING	APPLIANCE TYPE	MOUNTING TYPE	STROBE TYPE	FACEPLATE COLOR	FACEPLATE LETTERING
SL23RHN-NR	S54329-F295-A1	3R	Horn	WALL / CEILING	None	RED	NO LETTERING
SL23RHN-NW	S54329-F254-A1				None	WHITE	NO LETTERING
SL24XHN-NR	S54329-F328-A1	4X			None	RED	NO LETTERING
SL24XHN-NW	S54329-F260-A1				None	WHITE	NO LETTERING
SL23RHS-FR	S54329-F255-A1	3R	Horn-Strobe	WALL / CEILING	Clear	RED	FIRE
SL23RHS-FW	S54329-F296-A1				Clear	WHITE	FIRE
SL24XHS-FR	S54329-F261-A1	4X			Clear	RED	FIRE
SL24XHS-FW	S54329-F329-A1				Clear	WHITE	FIRE
SL23RST-FR	S54329-F258-A1	3R	Strobe	WALL / CEILING	Clear	RED	FIRE
SL23RST-FW	S54329-F306-A1				Clear	WHITE	FIRE
SL24XST-FR	S54329-F265-A1	4X			Clear	RED	FIRE
SL24XST-FW	S54329-F339-A1				Clear	WHITE	FIRE
SL23RSTAM-NR	S54329-F280-A1	3R			Amber	RED	NO LETTERING
SL23RSTAM-NW	S54329-F279-A1				Amber	WHITE	NO LETTERING
SL24XSTAM-NR	S54329-F294-A1	4X			Amber	RED	NO LETTERING
SL24XSTAM-NW	S54329-F293-A1				Amber	WHITE	NO LETTERING
SL23RSTB-NW	S54329-F307-A1	3R	Strobe	WALL / CEILING	Blue	WHITE	NO LETTERING
SL23RSTB-NR	S54329-F308-A1				Blue	RED	NO LETTERING
SL23RSTG-NW	S54329-F309-A1				Green	WHITE	NO LETTERING
SL23RSTG-NR	S54329-F310-A1				Green	RED	NO LETTERING
SL23RSTR-NW	S54329-F311-A1				Red	WHITE	NO LETTERING
SL23RSTR-NR	S54329-F312-A1				Red	RED	NO LETTERING

Details for Ordering

MODEL	PART NUMBER	NEMA RATING	APPLIANCE TYPE	MOUNTING TYPE	STROBE TYPE	FACEPLATE COLOR	FACEPLATE LETTERING
SL24XSTB-NW	S54329-F340-A1	4X	Strobe	WALL / CEILING	Blue	WHITE	NO LETTERING
SL24XSTB-NR	S54329-F341-A1				Blue	RED	NO LETTERING
SL24XSTG-NW	S54329-F342-A1				Green	WHITE	NO LETTERING
SL24XSTG-NR	S54329-F343-A1				Green	RED	NO LETTERING
SL24XSTR-NW	S54329-F344-A1				Red	WHITE	NO LETTERING
SL24XSTR-NR	S54329-F345-A1				Red	RED	NO LETTERING

Related Hardware

Model	Part Number	Description
SL2LP-ALR	S54329-F313-A1	**"ALERT"** Letter Plate Red
SL2LP-ALW	S54329-F314-A1	**"ALERT"** Letter Plate White
SL2LP-AR	S54329-F315-A1	**"AGENT"** Letter Plate Red
SL2LP-AW	S54329-F316-A1	**"AGENT"** Letter Plate White
SL2LP-COR	S54329-F317-A1	**"CO"** Letter Plate Red
SL2LP-COW	S54329-F318-A1	**"CO"** Letter Plate White
SL2LP-EVR	S54329-F319-A1	**"EVACUATION"** Letter Plate Red
SL2LP-EVW	S54329-F320-A1	**"EVACUATION"** Letter Plate White
SL2LP-FBR	S54329-F321-A1	**"FIRE"** PICTOGRAM Letter Plate Red
SL2LP-FBW	S54329-F322-A1	**"FIRE"** PICTOGRAM Letter Plate White
SL2LP-FR	S54329-F259-A1	**"FIRE"** Letter Plate Red
SL2LP-FW	S54329-F323-A1	**"FIRE"** Letter Plate White
SL2LP-MR	S54329-F324-A1	**"EMERGENCY"** Letter Plate Red
SL2LP-MW	S54329-F325-A1	**"EMERGENCY"** Letter Plate White
SL2LP-NR	S54329-F326-A1	**"NO TEXT"** Letter Plate Red
SL2LP-NW	S54329-F327-A1	**"NO TEXT"** Letter Plate White

Note: Replacement letter plates have the text printed in horizontal orientation on one side for ceiling mount applications, and vertical orientation on the other for wall mount. Each notification appliance requires two (2x) plates, one for each side. These letter plates come in packs of twenty (20x), enough for ten (10x) notification devices.

NOTICE – The information contained in this data-sheet document is intended only as a summary, and is subject to change without notice. The product(s) described here has/have a specific instruction sheet(s) that cover various technical, limitation and liability information.

Copies of install-type, instruction sheets – as well as the *General Product Warning and Limitations* document, which also contains important data, are provided with the product. All are available from the Manufacturer.

Data contained in the aforesaid type of documentation should be consulted with a fire-safety professional before specifying or using the product.

Any further questions or assistance concerning particular problems that might arise, relative to the proper functioning of the equipment, please contact the Manufacturer.

SIEMENS

Siemens Industry, Inc.
Smart Infrastructure – Building Products
2 Gatehall Drive • Parsippany, NJ 07054
Tel: (973) 593-2600

November – 2025
Rev. 3